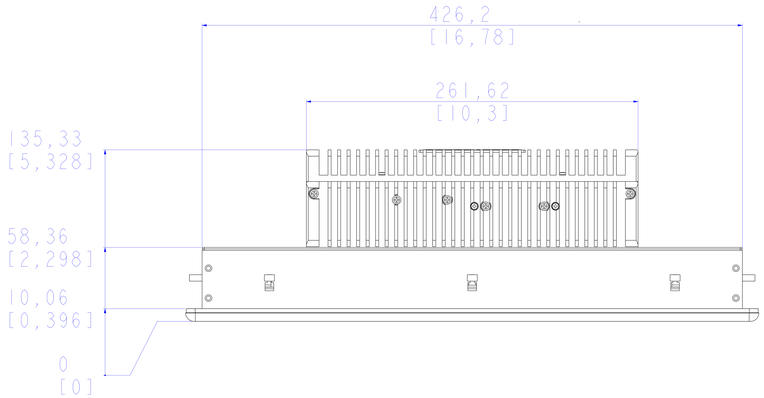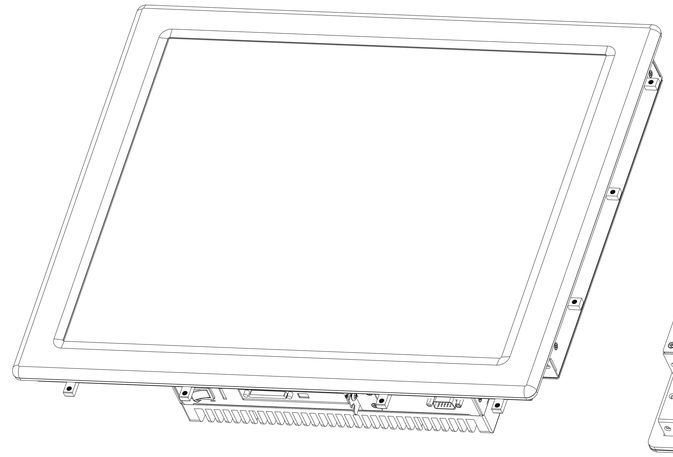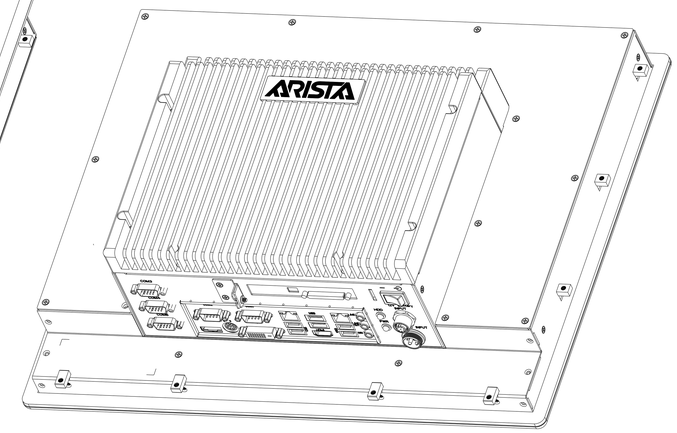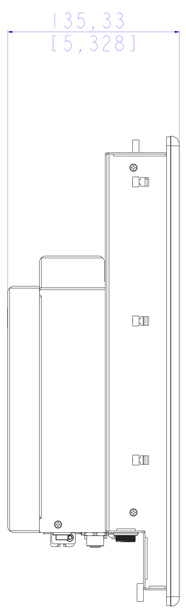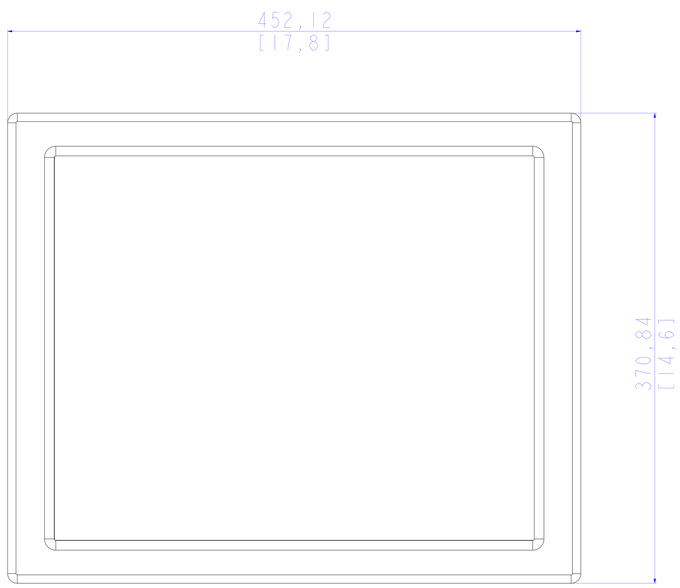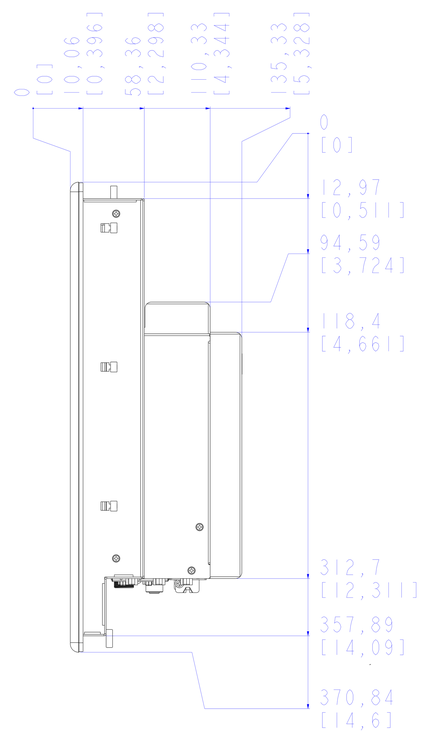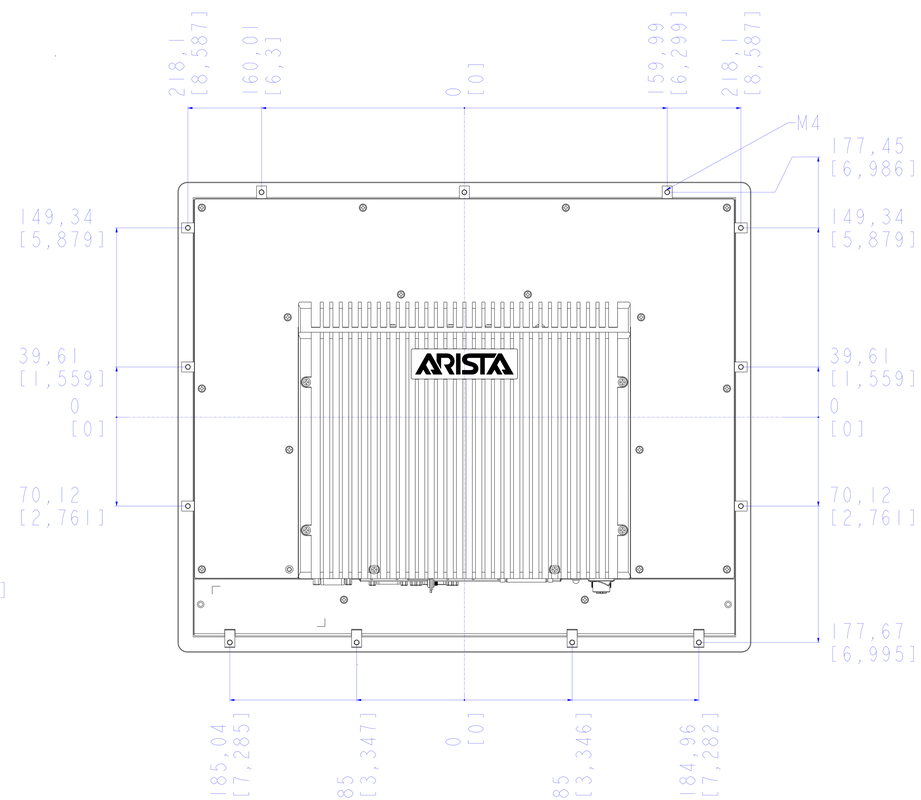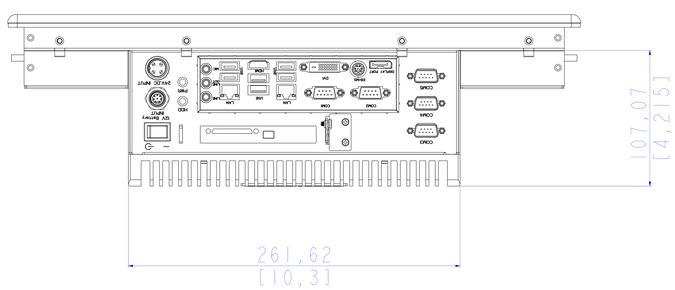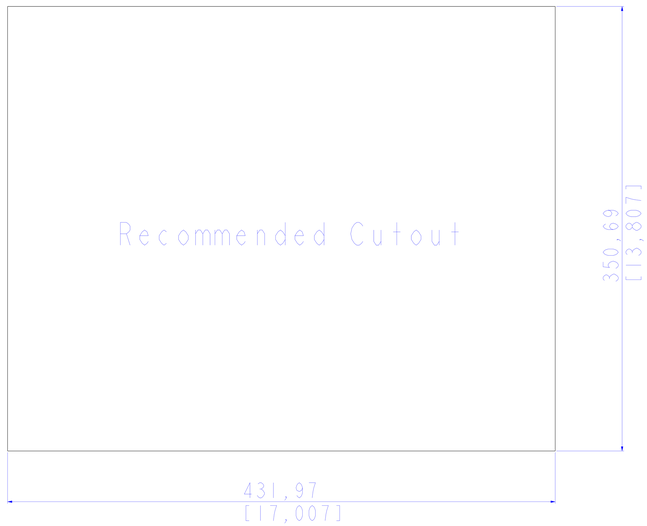ARP-2219AP-G01